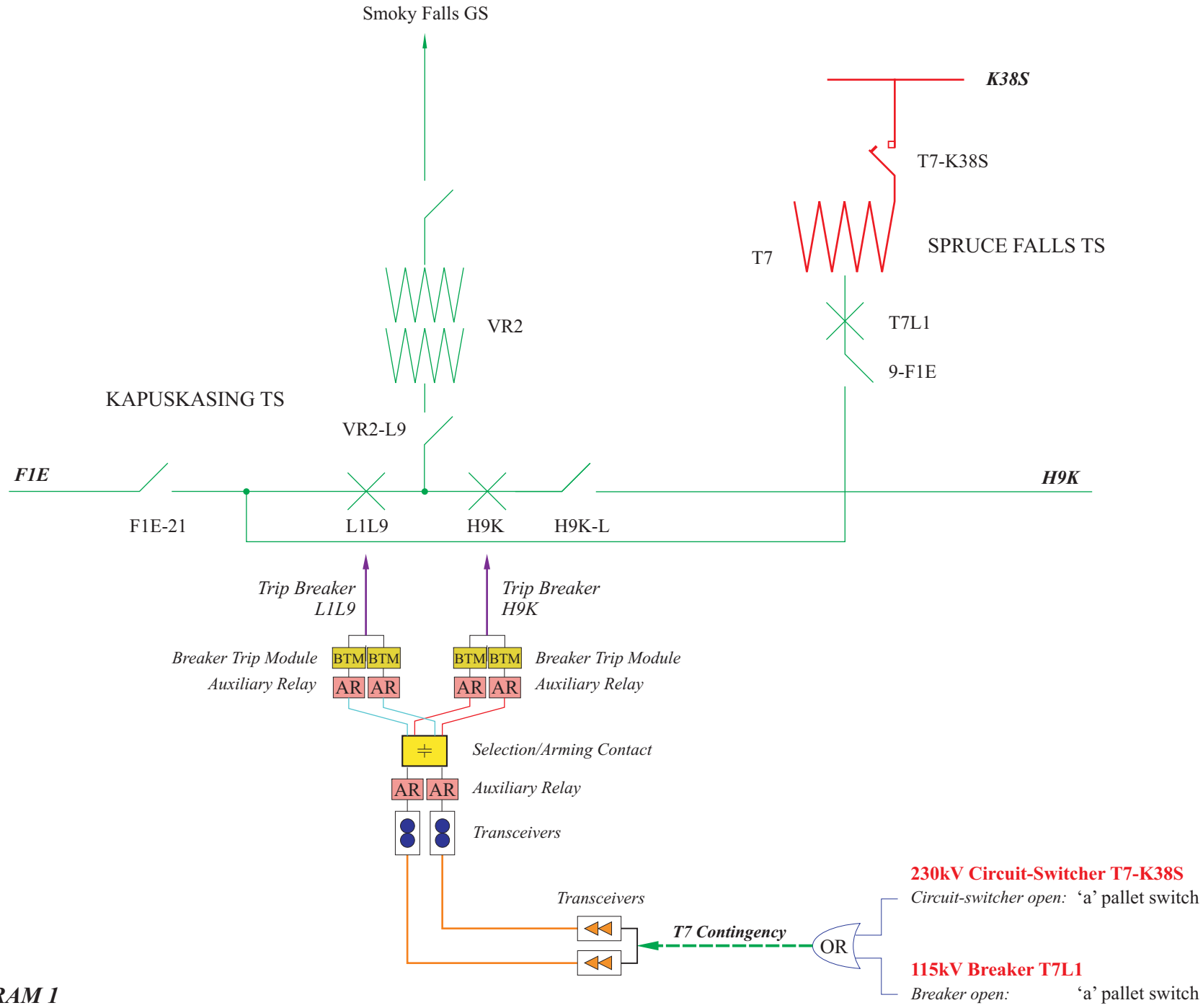

DIAGRAM 1

31st March 2010

Kapuskasing Cross-Tripping Scheme